140 mm

200 mm

OBDResource®

Web: www.obdresource.cn
E-Mail: info@obdresource.com

Quick Start Guide

ST100 | Spark Plug Tester

SAFETY WARNING

- Never pull out or insert the spark plug with the power supply connected. Prior to any manipulation, make sure to turn off the power.
- High voltage! Avoid touching the spark plug with bare hands to prevent injury.

PRODUCT DESCRIPTION 01

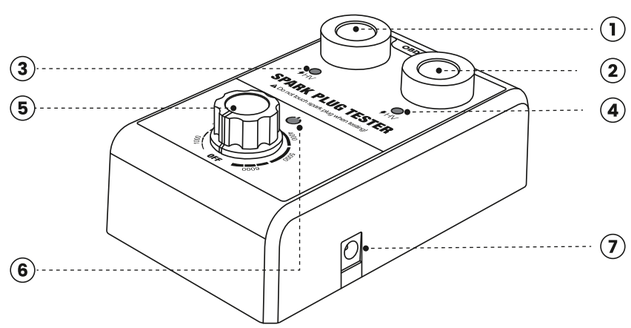

1 2 Spark Plug Socket
3 4 HV (High Voltage Indicator)
5 Switch
6 Power Indicator
7 Power Port

Note:
If the spark plug cannot reach the negative cylinder iron, use a shim for testing. It is only necessary to use it if the negative cylinder iron cannot be contacted, not for every test. [*Spark plugs that do not require shims will cause normal spark plugs to not work if used.]

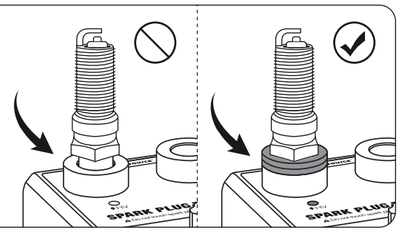

OPERATION GUIDE 02

1

Insert the spark plug into either tester socket 1 or 2 .

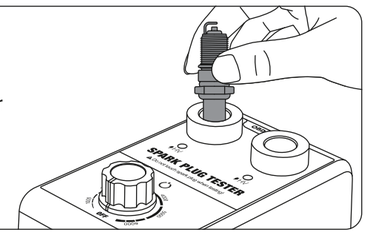

2

Insert the spark plug into the tester socket, then plug in the adaptor and connect the tester to the power supply.

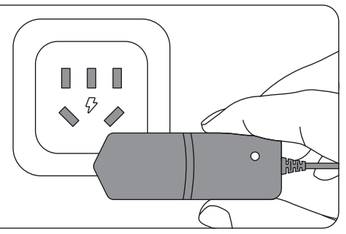

3

Turn switch 5 clockwise to power on the tester. Indicator 6 will light up red.

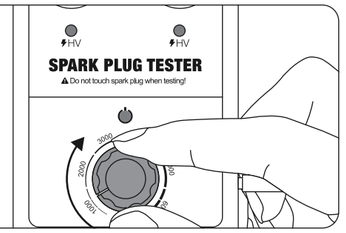

4

Turn switch 5 clockwise to adjust the working frequency between 1000rpm to 6000rpm/min for stronger spark strength.

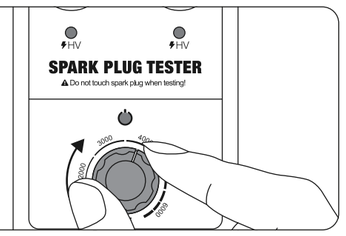

Company Address: #1 Donghuan Blvd, Longhua District, Shenzhen, CN
Factory Address: Xinniu Community, Longhua District, Shenzhen, CN
Copyright © 2024 OBDResource Electronics Co.,Ltd

正面

背面

140x200mm-157G铜版纸-双面印刷-对折